EMERALD RSC + FIRE

LUXURY JEWELRY SAFE

OUR MOST POPULAR SIZE

UL Tested Residential Burglar & 2 Hour Fire Protection



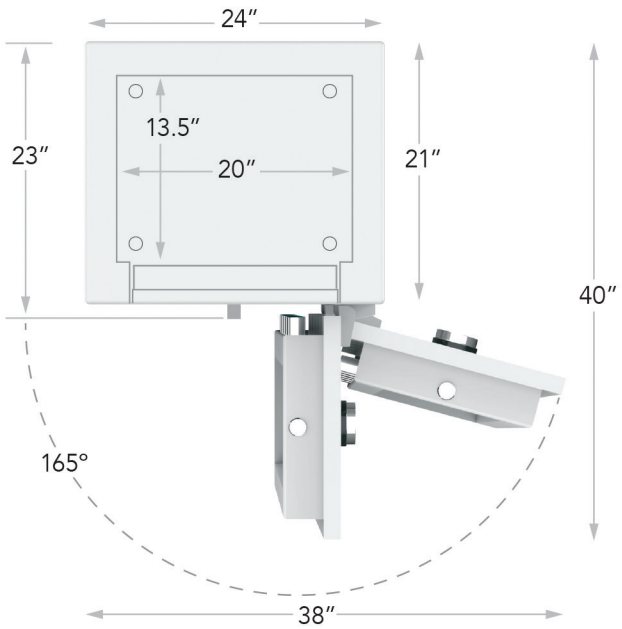

Specifications

Exterior Dimensions: 59.5” H x 24” W x 23” D
Interior Dimensions: 53” H x 20” W x 13.5” D
Weight: 775 lbs.
Anchor holes in floor corners

Standard Drawer Configurations

4 Drawers: 3 at 1.5” and 1 at 3.5” / 38” vertical space remaining
7 Drawers: 6 at 1.5” and 1 at 3.5” / 31” vertical space remaining
11 Drawers: 8 at 1.5” and 3 at 3.5” / 18” vertical space remaining

NOTE: Add 2” to ALL exterior dimensions for more reliable installation. Safe door must open more than 90° as illustrated to fully extend drawers. The manufacturer reserves the right to incorporate any improvements, alter any specifications and update products as necessary without prior notice.



CASORO
JEWELRY SAFES

PHONE 714.550.4123 · TOLL FREE 800.538.0600
FAX 800.538.0600 · CASOROJEWELRYSAFES.COM
CUSTOM MADE IN THE USA ·